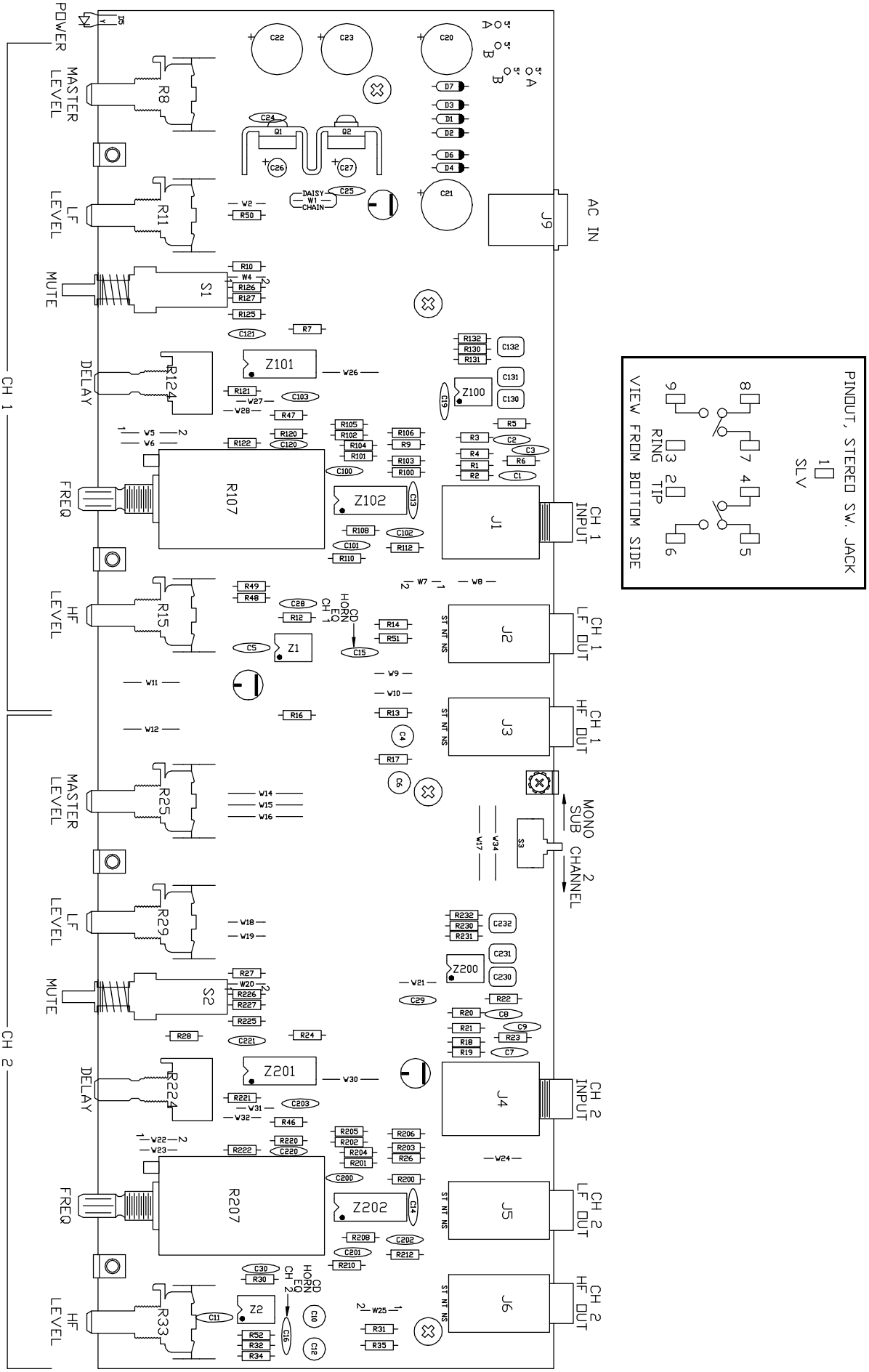

Rane Corp. (425)355-6000
100486 DES AC 22
ACTION: PART NOT CHANGED, NEW DOC #'S RWJ 22NOV97

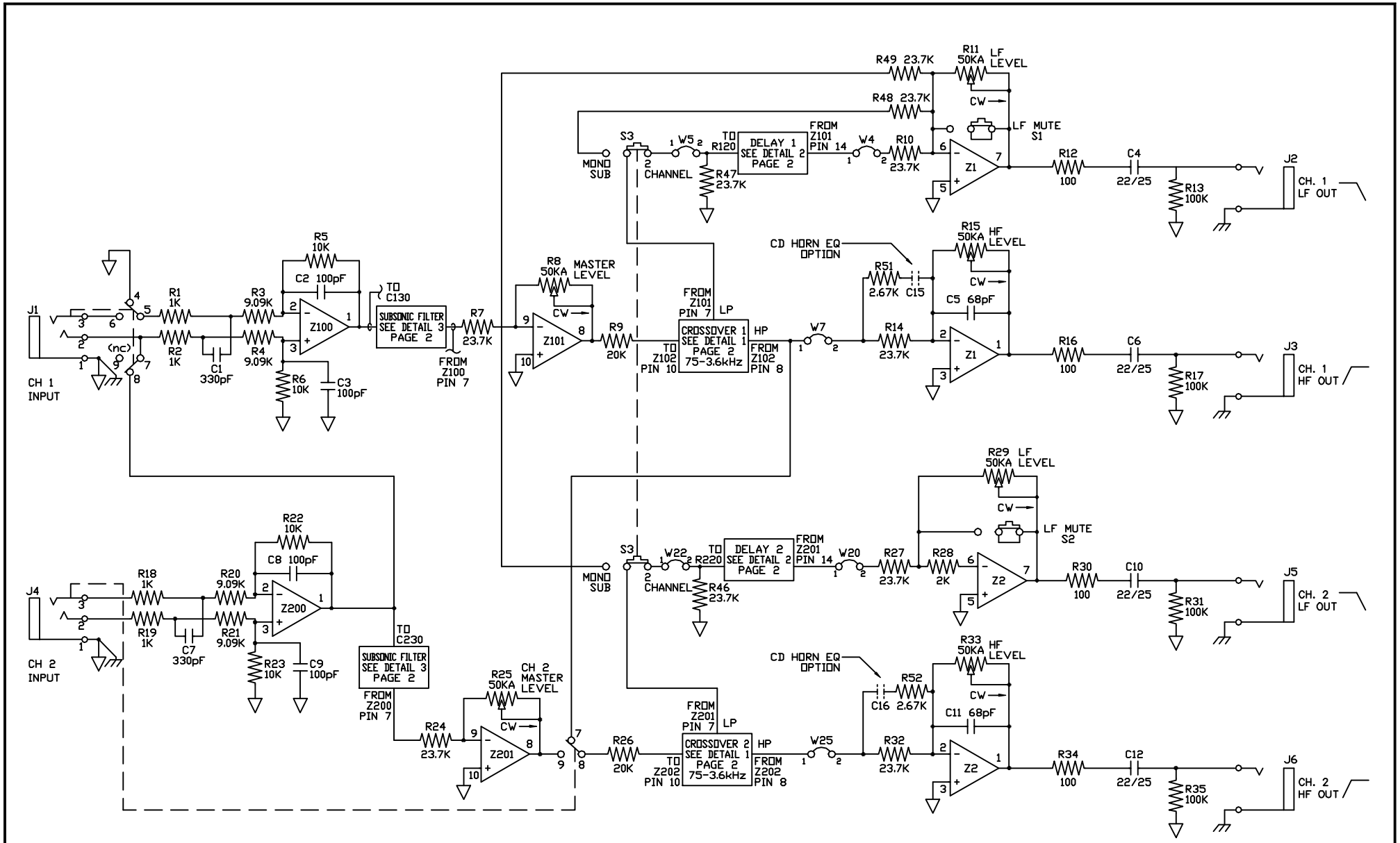

ACTION: NO CHANGE TO DRAWING, NEW DOC#			REVISED: FJ	APPROVED:	DATE: 23JUL98
DRAWN: SPT	DATE: 14APR88	CHECKED: AWC DATE: 21APR88	SHEET: 1 OF 2	DO NOT SCALE DRAWING	

RANE
Corp. 10802 47th Avenue West, Mukilteo
WA 98275-5098 (425) 355-6000

TITLE: INPUTS/OUTPUTS AC 22

DOC. NO. 102144

DETAIL 1: TYPICAL LINKWITZ-RILEY CROSSOVER CIRCUIT

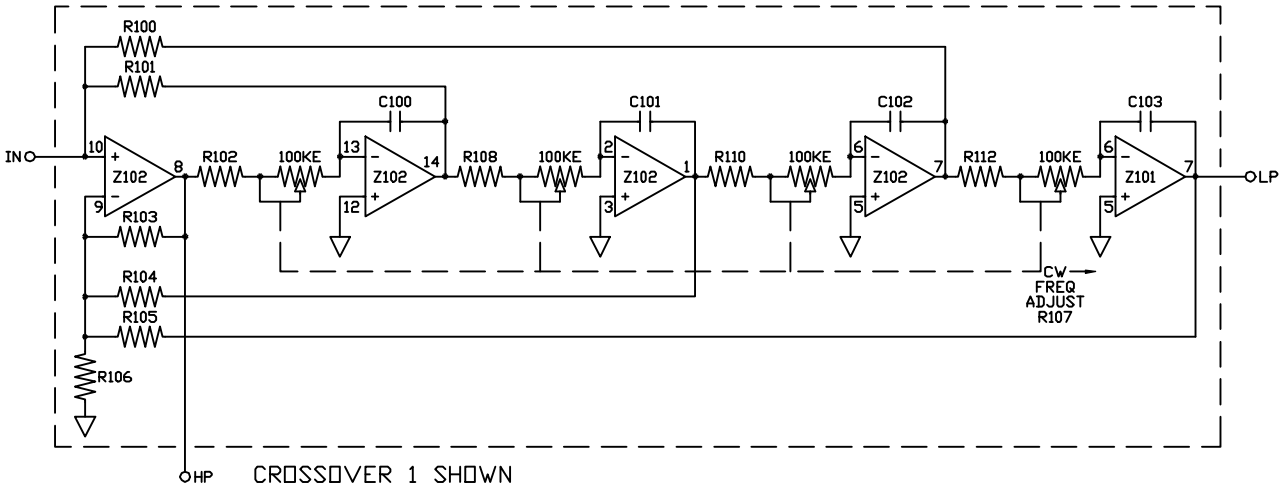

CROSSOVER 1 SHOWN
(CROSSOVER 2, 3, 4 DESIGNATED: 200, 300, 400)

DETAIL 2: TYPICAL DELAY

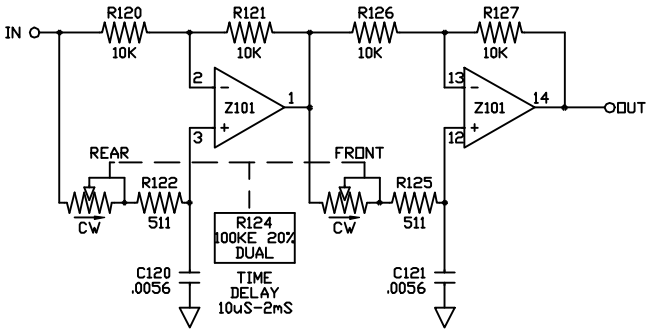

DELAY 1 SHOWN
(DELAY 2, 3, 4 DESIGNATED: 220, 320, 420)

POWER SUPPLY

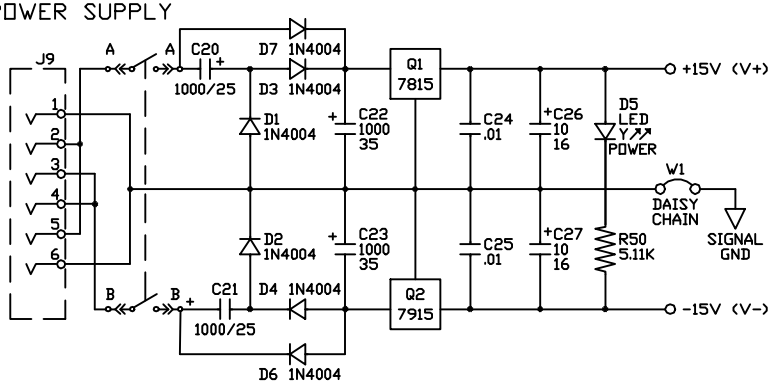

DECOUPLING CAPS

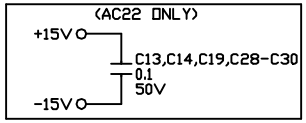

DETAIL 3: TYPICAL SUBSONIC FILTER

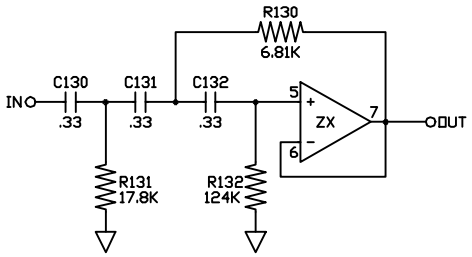

CHANNEL 1 SHOWN
(CH 2 DESIGNATED: 230)

	ZX
CH1	Z100
CH2	Z200

NOTES (UNLESS OTHERWISE NOTED)

1. ALL RES 1/4W, 1%, METAL FILM.
2. POWER SUPPLY CONNECTIONS:

	POS SUP	NEG SUP
SING	7	4
DUAL	8	4
QUAD	4	11

3. ALL SWs SHOWN IN THEIR "OUT" OR "OFF" POSITION
4. IC TYPES: Z1, Z2, Z100, Z200 = TL072
   Z101, Z102, Z201, Z202 = 2059

ACTION: 2059 WAS OP11, NEW DOC#			REVISED: FJ	APPROVED:	DATE: 23JUL98
DRAWN: SPT	DATE: 18APR88	CHECKED: AWC	DATE: 21APR88	SHEET: 1 OF 2	DO NOT SCALE DRAWING

RANE
Corp. 10802 47th Avenue West, Mukilteo
WA 98275-5098 (425) 355-6000

TITLE: PWR SUP/DETAILS
AC 22

DOC. NO.
102144