FENDER MODEL "BANDMASTER REVERB-AMP AA270" SCHEMATIC

TF-2005D

THIS PRODUCT MANUFACTURED UNDER ONE OR MORE OF THE FOLLOWING U.S. PATENTS
CIRCUIT PATENT #2817708, #2973681
DESIGN PATENT #192859
PATENTS PENDING

NOTICE

1. VOLTAGES REAR TO GROUND WITH ELECTRONIC VOLTMETER
2. ALL RESISTORS 1/2 WATT 10% TOLERANCE IF NOT SPECIFIED
3. ALL CAPACITORS AT LEAST 400 VOLT RATING IF NOT SPECIFIED
4. ALL VOLTAGES READ WITH VIBRATO PEDAL GROUNDED AND NO INPUT SIGNAL

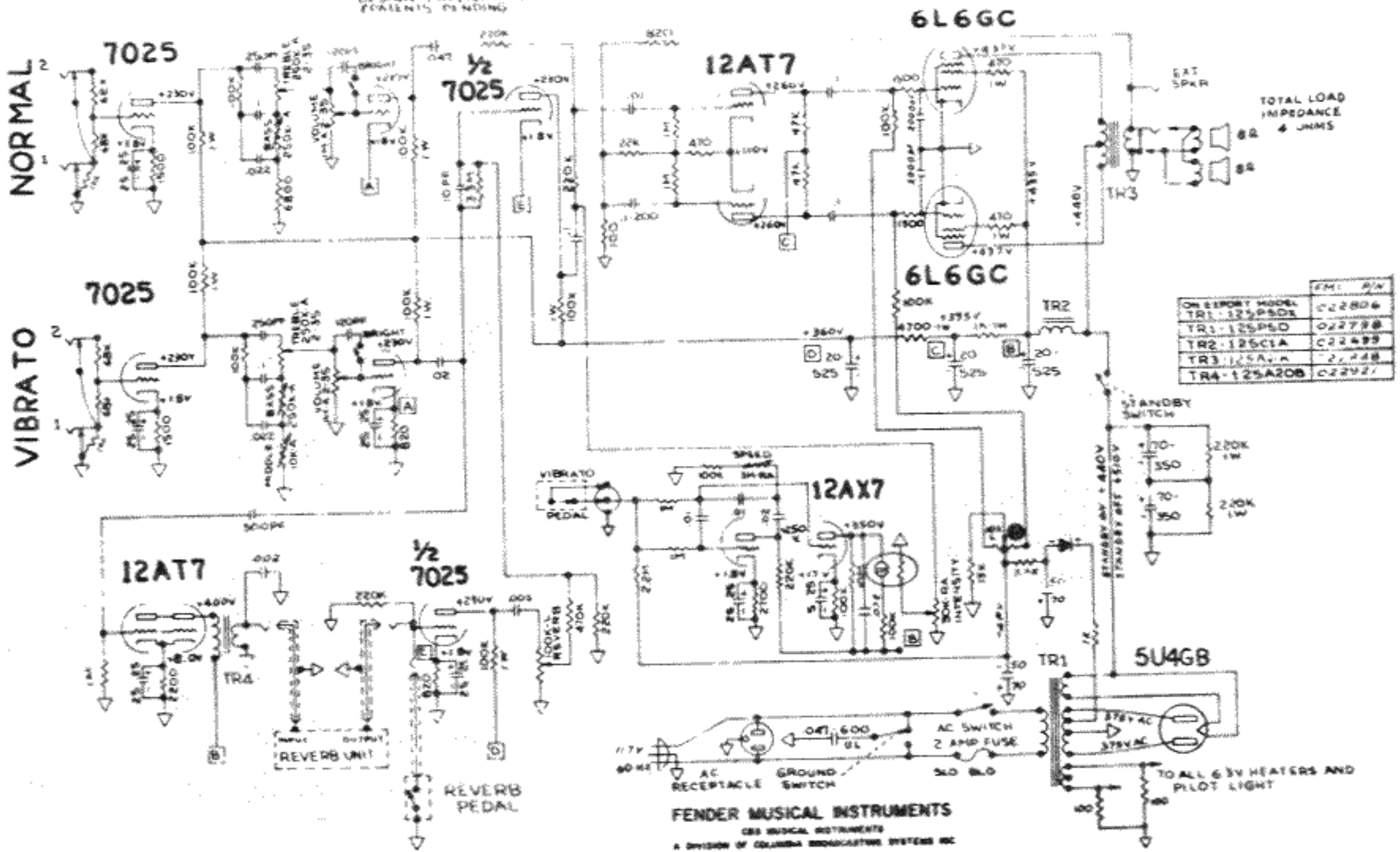

	FMI P/N
ON EXPORT MODEL TR1-125P50X	C22806
TR1-125P50	022798
TR2-125C1A	C22499
TR3-125A[illegible]	[illegible]
TR4-125A20B	C22921

FENDER MUSICAL INSTRUMENTS
CBS MUSICAL INSTRUMENTS
A DIVISION OF COLUMBIA BROADCASTING SYSTEMS INC
FULLERTON, CALIFORNIA
U.S.A.